NOTE:
OVERALL SHIPPING DIMENSION: 20'-3" L X 8'-0" W X 6'-8" H

ITEM	SIZE	SUGGESTED FUNCTION
1	4"	SPARE
2	6"	FILL
3	3"	PRIMARY TANK WORKING VENT
4	18"	ABOVE LIQUID MANHOLE, DWG."MHB005"
5	2"	MECHANICAL GAUGE/SPARE
6	8"	PRIMARY TANK EMERGENCY VENT
7	2"	SPARE
8	LARGE	LIFTING LUG
9	8"	SECONDARY CONTAINMENT EMERGENCY VENT
10	2"	SECONDARY MONITOR PORT
11	2"	SECONDARY WORKING VENT

TANK SPECIFICATIONS
VENTING CAPACITY: PRIMARY TANK - 354,000 CUBIC FEET PER HOUR
SECONDARY TANK - 354,000 CUBIC FEET PER HOUR
MATERIAL: PRIMARY TANK - 1/4" THICK
SECONDARY TANK - 3/16" THICK

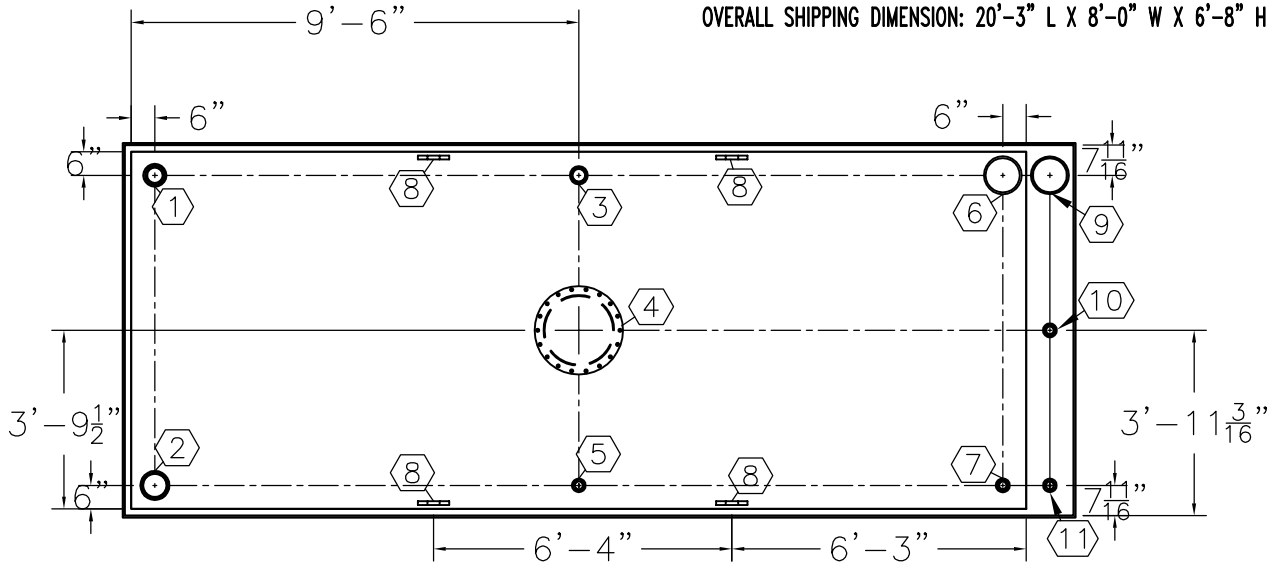

TOP VIEW

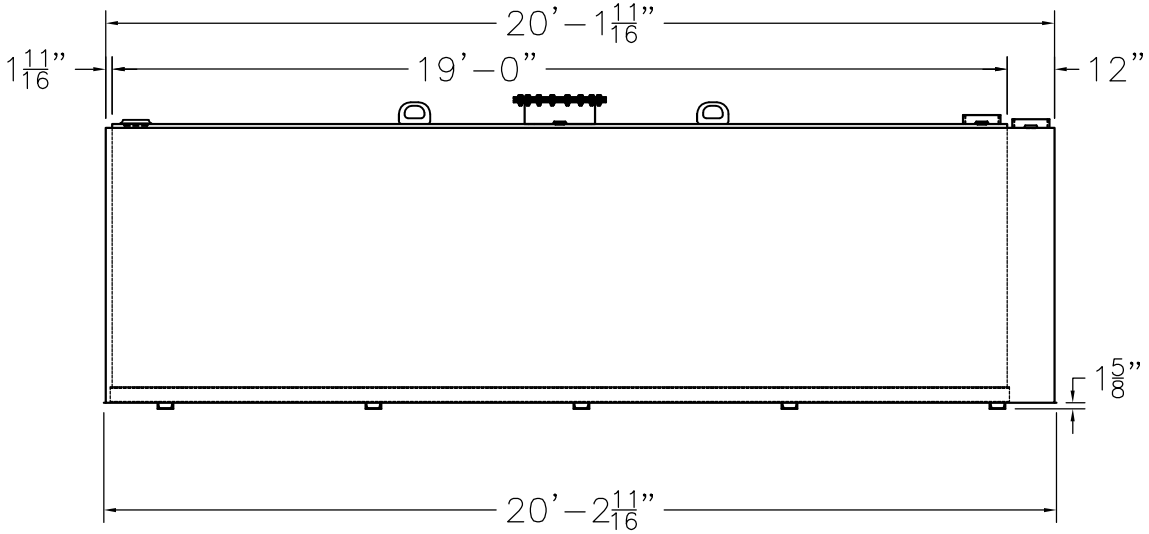

ELEVATION

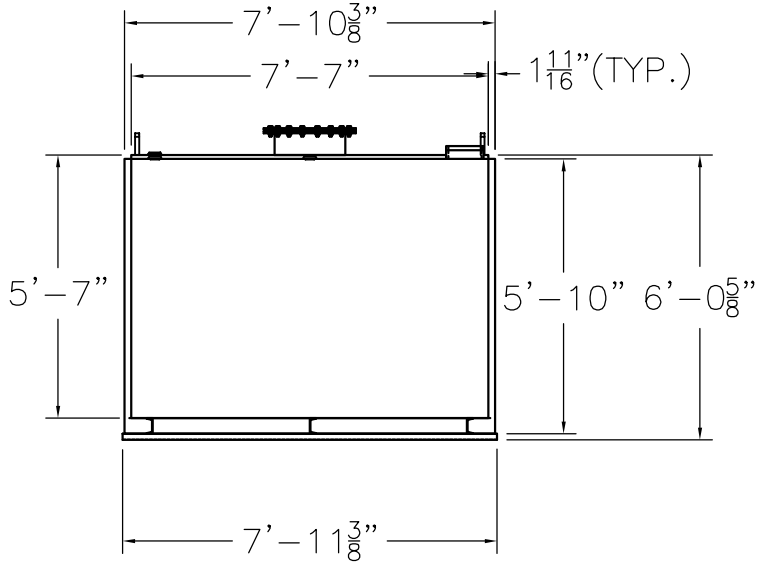

END VIEW

PRODUCT CODE	GALLONS	DESCRIPTION	OVERALL SIZE	SHIP WT.
LCAA106MDS000	6,000	UL-142 DOUBLE WALL LUBE CUBE TANK	20'-3" L X 8'-0" W X 6'-1" H	11,400 LBS.

THIS DRAWING AND DESIGN SHOWN HEREIN IS THE PROPERTY OF CONTAINMENT SOLUTIONS. USE OR COPIES THEREOF CANNOT BE MADE WITHOUT WRITTEN CONSENT.

CUSTOMER NAME

APPROVED BY: _____ DATE: _____

CONTAINMENT SOLUTIONS®

DRAWN BY: D. ROVANG	DATE DRAWN: 01-01-14
DWG NUMBER: 5100107	SCALE: 1:50
REV: REV BY: DATE:	SHEET: 1 OF 1