**NOTE:**

OVERALL SHIPPING DIMENSION: 7'-1" L X 5'-2" W X 4'-7" H

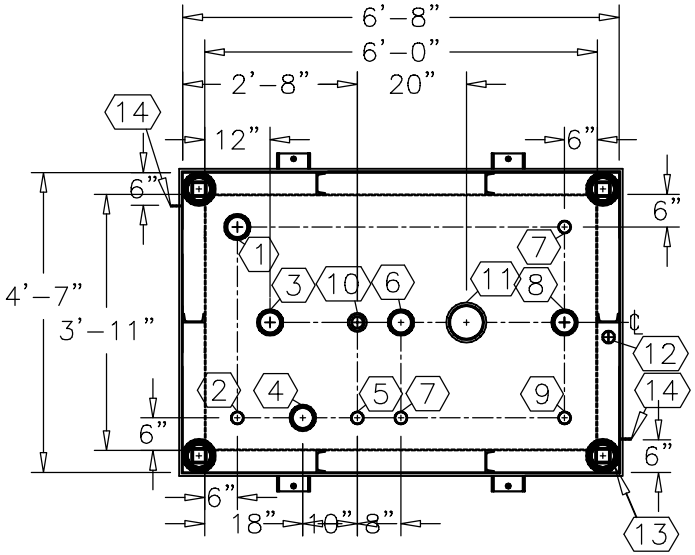


**TOP VIEW**

| ITEM | SIZE | SUGGESTED FUNCTION |
|---|---|---|
| 1 | 4" | PHASE 1 VAPOR RECOVERY/SPARE |
| 2 | 2" | MECHANICAL GAUGE |
| 3 | 4" | FILL |
| 4 | 4" | ELECTRONIC LEVEL GAUGE |
| 5 | 2" | PRIMARY WORKING VENT |
| 6 | 4" | PRIMARY TANK EMERGENCY VENT |
| 7 | 2" | SPARE |
| 8 | 4" | SUBMERSIBLE PUMP |
| 9 | 2" | SUCTION PUMP/SPARE |
| 10 | 2" | SECONDARY WORKING VENT |
| 11 | 6" | SECONDARY CONTAINMENT EMERGENCY VENT |
| 12 | 2" | SECONDARY MONITOR PIPE |
| 13 | 4" | FIRE RATED MATERIAL FILL |
| 14 | 2" X 2" | GROUND CLIP, DWG."MCB004" |

**TANK SPECIFICATIONS**

VENTING CAPACITY: PRIMARY TANK - 94,800 CUBIC FEET PER HOUR
SECONDARY TANK - 126,000 CUBIC FEET PER HOUR

MATERIAL: PRIMARY TANK - 3/16" THICK
SECONDARY TANK - 3/16" THICK

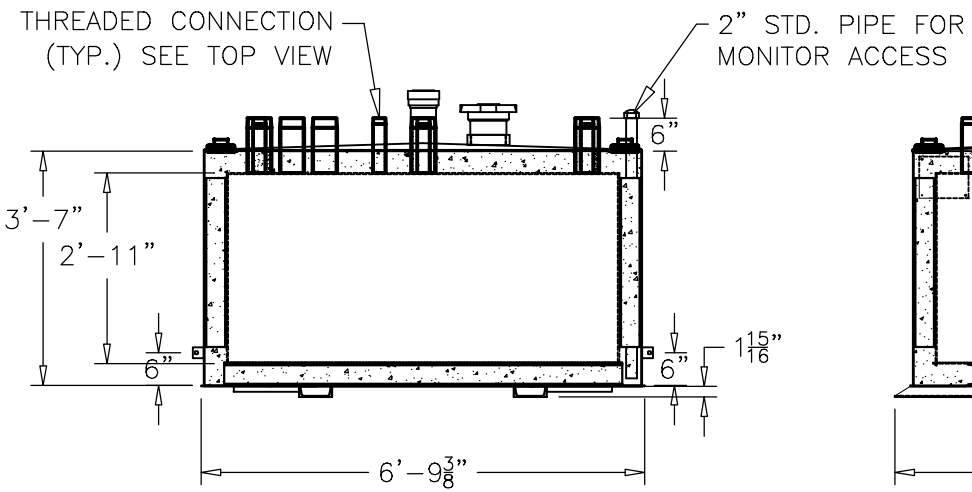


**ELEVATION**

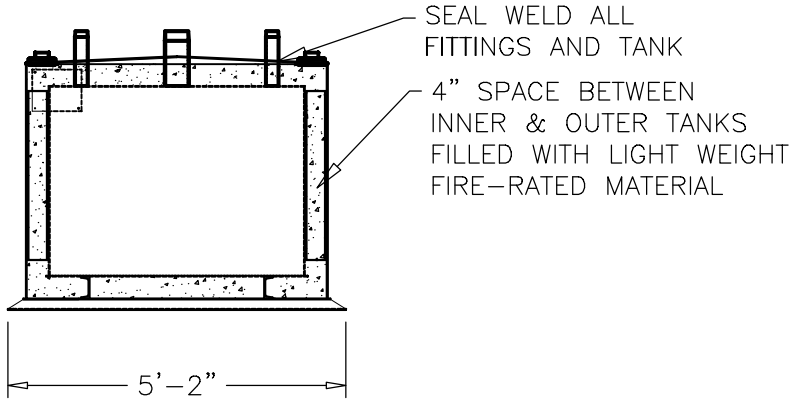


**END VIEW**

| PRODUCT CODE | GALLONS | DESCRIPTION | OVERALL SIZE | SHIP WT. |
|---|---|---|---|---|
| V4AA1500VS000 | 500 | U/L-2085 ABOVE GROUND VAULT TANK | 6'-8" L X 4'-7" W X 3'-9" H | 5,400 LBS. |

THIS DRAWING AND DESIGN SHOWN HEREIN IS THE PROPERTY OF CONTAINMENT SOLUTIONS. USE OR COPIES THEREOF CANNOT BE MADE WITHOUT WRITTEN CONSENT.

CUSTOMER NAME

APPROVED BY: _____ DATE: _____

CONTAINMENT SOLUTIONS®

| | |
|---|---|
| DRAWN BY: D. ROVANG | DATE DRAWN: 01-01-14 |
| DWG NUMBER: 5100016 | SCALE: 1:36 |
| REV: REV BY: DATE: | SHEET: 1 OF 1 |