NOTE:
OVERALL SHIPPING DIMENSION: 2'-10" L X 2'-10" W X 5'-2" H

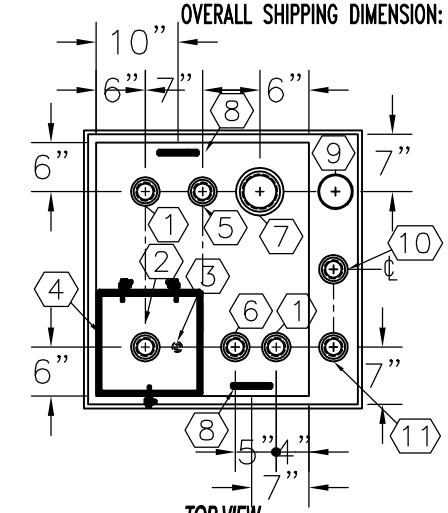

TOP VIEW

ITEM	SIZE	SUGGESTED FUNCTION
1	2"	SPARE
2	2"	FILL
3	1/2"	DRAIN FOR SPILLBOX
4	7 GAL.	SPILLBOX, DWG."SBB002"
5	2"	PRIMARY TANK WORKING VENT
6	2"	MECHANICAL GAUGE/ SPARE
7	4"	PRIMARY TANK EMERGENCY VENT
8	SMALL	LIFTING LUG
9	4"	SECONDARY CONTAINMENT EMERGENCY VENT
10	2"	SECONDARY MONITOR PORT/ SPARE
11	2"	SECONDARY WORKING VENT

TANK SPECIFICATIONS

VENTING CAPACITY: PRIMARY TANK - 42,100 CUBIC FEET PER HOUR
SECONDARY TANK - 52,700 CUBIC FEET PER HOUR

MATERIAL: PRIMARY TANK - 10 GA.
SECONDARY TANK - 10 GA.

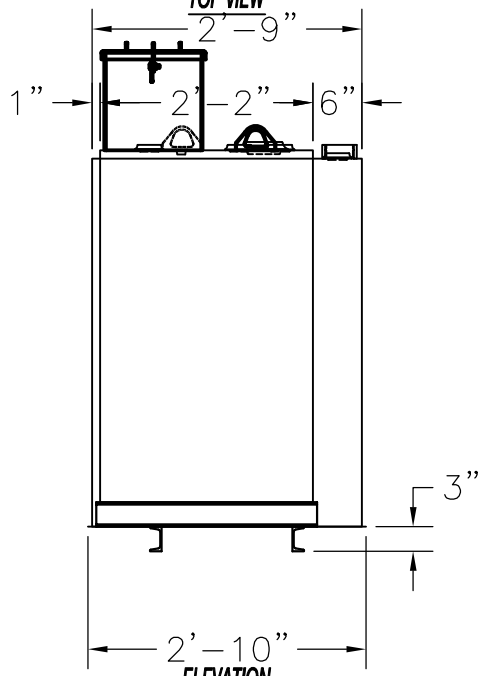

ELEVATION

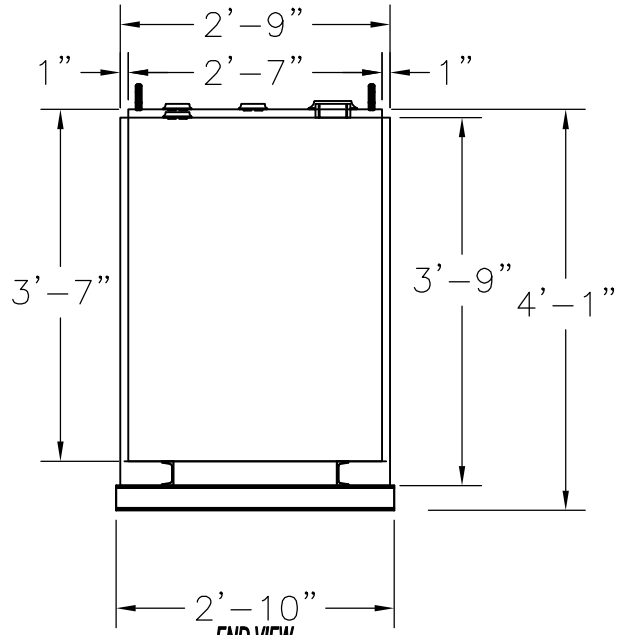

END VIEW

PRODUCT CODE	GALLONS	DESCRIPTION	OVERALL SIZE	SHIP WT.
LCAA1150D8531	150	UL-142 DOUBLE WALL LUBE CUBE TANK	2'-10" L X 2'-10" W X 4'-1" H	645 LBS.

THIS DRAWING AND DESIGN SHOWN HEREIN IS THE PROPERTY OF CONTAINMENT SOLUTIONS. USE OR COPIES THEREOF CANNOT BE MADE WITHOUT WRITTEN CONSENT.

CUSTOMER NAME

APPROVED BY: _____ DATE: _____

CONTAINMENT SOLUTIONS®

DRAWN BY: D. ROVANG	DATE DRAWN: 07-31-17
DWG NUMBER: 5107265	SCALE: 1:24
REV: A / REV BY: DAR	DATE: 10-23-17 / SHEET: 1 OF 1